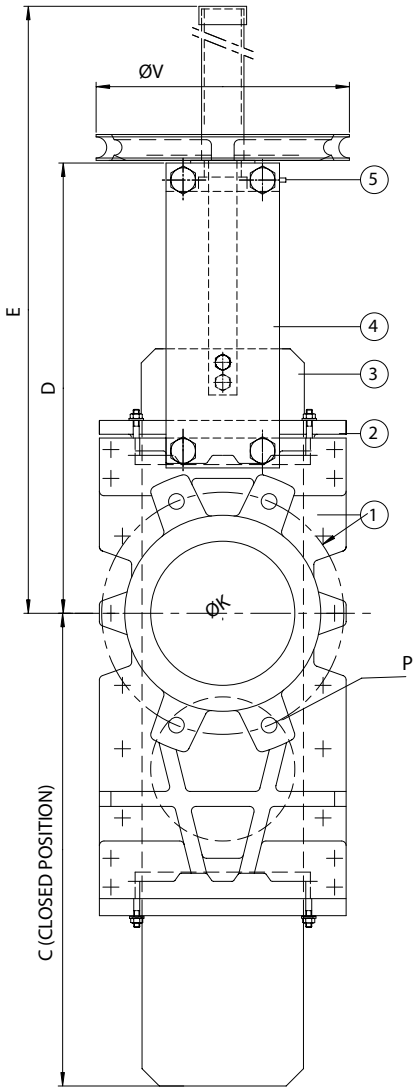


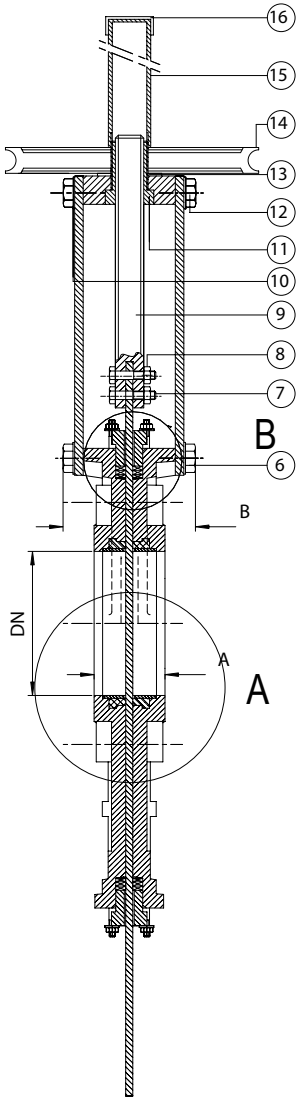


DETAIL A

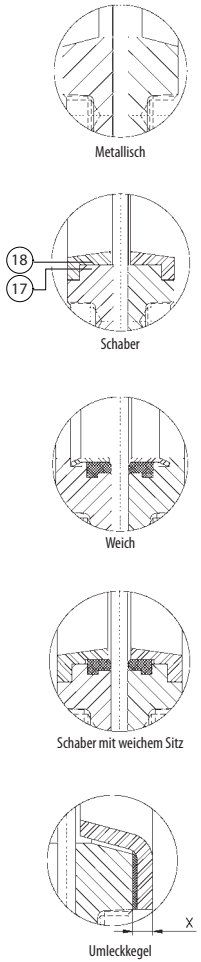


DETAIL B

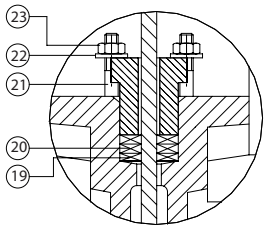


Abmessungen*

| DN | INCH | A | B | C | D | E | V | X |
|---|---|---|---|---|---|---|---|---|
| 50 | 2" | 40 | 92 | 220 | 240 | 425 | 210 | 9 |
| 65 | 2 1/2" | 40 | 92 | 260 | 270 | 450 | 210 | 9 |
| 80 | 3" | 50 | 92 | 303 | 295 | 480 | 210 | 9 |
| 100 | 4" | 50 | 92 | 360 | 335 | 520 | 210 | 9 |
| 125 | 5" | 50 | 102 | 428 | 370 | 600 | 260 | 9 |
| 150 | 6" | 60 | 102 | 493 | 418 | 650 | 260 | 9 |
| 200 | 8" | 60 | 119 | 632 | 522 | 820 | 300 | 9 |
| 250 | 10" | 70 | 119 | 767 | 625 | 1020 | 300 | 9 |
| 300 | 12" | 70 | 119 | 897 | 725 | 1120 | 300 | 12 |
| 350 | 14" | 96 | 192 | 1042 | 845 | 1380 | 400 | 12 |
| 400 | 16" | 100 | 192 | 1167 | 945 | 1490 | 400 | 12 |
| 450 | 18" | 106 | 192 | 1297 | 1045 | 1580 | 500 | 12 |
| 500 | 20" | 110 | 192 | 1455 | 1148 | 1690 | 500 | 12 |
| 600 | 24" | 110 | 290 | 1705 | 1360 | 2030 | 500 | 12 |

Materialien*

| | | GG25 Typ | Edelstahl Typ |
|---|---|---|---|
| 1 | **Gehäuse** | GG25 | 1.4408/CF8M |
| 2 | **Stopfbuchsbrille** | Aluminium | 1.4408/SS316 |
| 3 | **Platte** | 1.4301/SS304 | 1.4408/SS316 |
| 4 | **Halteplatte** | Stahl | Stahl |
| 5 | **Schmierstelle** | Stahl | Stahl |
| 6 | **Bolzen** | Stahl | Edelstahl |
| 7 | **Schrauben** | Stahl | Edelstahl |
| 8 | **Mutter** | Stahl | Edelstahl |
| 9 | **Spindel** | 1.4301/SS304 | 1.4301/SS304 |
| 10 | **Unterlegscheibe** | Stahl | Edelstahl |
| 11 | **Spindelmutter** | Bronce | Bronze |
| 12 | **Spindellager** | Stahl | Stahl |
| 13 | **Unterlegscheibe** | Stahl | Stahl |
| 14 | **Kettenrad** | 1.4305/SS305 | 1.4305/SS305 |
| 15 | **Hülse** | Stahl | Stahl |
| 16 | **Deckel** | Plastic | Plastic |
| 17 | **Sitz** | EPDM / NBR / Viton / Silicon / Flucast ABP / PTFE | |
| 18 | **Ring** | 1.4408/SS316 | 1.4408/SS316 |
| 19 | **Packung** | Synt. + PTFE / PTFE / Graphite / Ceramic fibre | |
| 20 | **Dichtung** | Nitrile | Nitrile |
| 21 | **Schrauben** | Stahl | Edelstahl |
| 22 | **Unterlegscheibe** | Stahl | Edelstahl |
| 23 | **Mutter** | Stahl | Edelstahl |

Druck

| | |
|---|---|
| DN50 - DN250: | 10 bar |
| DN300 - DN400: | 6 bar |
| DN450: | 5 bar |
| DN500 - DN600: | 4 bar |
| DN700 - DN1200: | 2 bar |

Farbe*

RAL 5015

Flansche nach
EN 1092-2, DIN 2501: ISO PN10
and ANSI B16.5 (class 150)
*(für weitere Informationen sehen Sie bitte aus unsere Website)*

**Andere Nennweiten / Materialien / Farben auf Anfrage*

Design and materials can be changed without notice. Errors and omissions excepted

# FL300 - Kettenrad

copyright © by
FERGO® Armaturen GmbH

Blindeisenweg 31
D-41468 Neuss

Tel.: +49(0) 2131 - 15 39 28-0
Fax: +49(0) 2131 - 15 39 28-99

Web: www.fergo.biz
E-Mail: info@fergo.biz