Your distribution partner:
Bindeisenweg 31 • D-41468 Neuss • Tel.: +49 2131 / 15 39 28-0 • Fax: +49 2131 / 15 39 28-99 • info@fergo.eu • www.fergo.eu

Register 18
Contents - T4E

Contents

Technical Data T4E-1, DN½“ to DN6“ 2
Technical Data T4E-1, DN8“ to DN14“ 3
Technical Data T4E-2, DN15 to DN150 4
Technical Data T4E-2, DN200 to DN300 5
Technical Data T4E-3, DN½“ to DN6“ 6
Technical Data T4E-3, DN8“, 10“ 7
Material specification T4E-1, DN½“ to DN6“ 8
Material specification T4E-1, DN8“ to DN14“ 8
Material specificationT4E-2, DN15 to DN150 9
Material specificationT4E-2, DN200 to DN300 9
Material specificationT4E-3, DN½“ to DN6“ 10
Material specification T4E-3, DN8“, 10“ 10
Spare Parts (Item.-No.) T4E 11
Assembly instructions T4E 12
Disassembly instructions T4E 13
T4E Installation Instructions 14
T4E Operating/Maintenance Instructions 15
T4E-3 - recommended Tightening Torques for Top Cap and Adjuster Boltings (CL300)* 16
T4E-1 & T4E-2 - recommended Tightening Torques for Top Cap and Adjuster Boltings (CL150 & PN16)* 16
T4E-1 & T4E-3 - Dimension sheet for actuator mounting 17
T4E-2 - Dimension sheet for actuator mounting 18
T4E - Actuator Sizing Torques 19
T4E - K_v Data and C_v Data (DIN EN 60534-2-3) 20
ET4E - K_v Data and C_v Data (DIN EN 60534-2-3) 20
Optional plug with side vent hole 21
Optional with V-plug or S-plug 22

FLOWSERVE
Ahaus GmbH
von-Braun-Straße 19a
D-48683 Ahaus
Postfach 1162 D-48661 Ahaus
Telefon: +49(0) 2561-686-100
Fax: +49(0) 2561-686-200

Your distribution partner:
fergo
Blindeisenweg 31 • D-41468 Neuss • Tel.: +49 2131 / 15 39 28-0 • Fax: +49 2131 / 15 39 28-99 • info@fergo.eu • www.fergo.eu

Technical Data T4E-1
DN½“ to DN6“

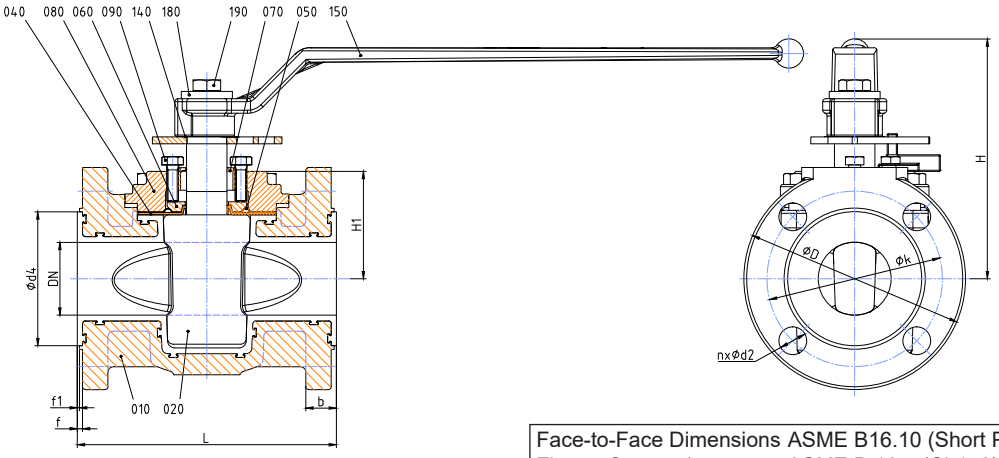

Face-to-Face Dimensions	ASME B16.10 (Short Pattern)
Flange Connections	ASME B 16.5 (CL150) min. flange thickness to ASME Class 150, Table 9 (Flange Fittings)

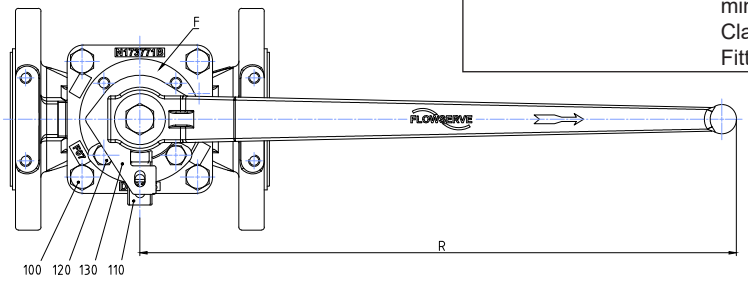

DN / ANSI		L	f1	f	b	H1	H	Ød4
½“	mm	108	1,5	3	14	53,8	139	36
	inch	4,25	0,06	0,12	0,55	2,12	5,47	1,42
¾“	mm	117,5	1,5	3	15,5	53,8	139	43
	inch	4,6	0,06	0,12	0,61	2,12	5,47	1,69
1“	mm	127	1,5	3	15,6	53,8	139,0	51
	inch	5	0,06	0,12	0,61	2,12	5,47	2,01
1½“	mm	165	2	4	20	62,9	145	73
	inch	6,5	0,08	0,16	0,79	2,48	5,71	2,87
2“	mm	178	1,5	3,5	21	73,8	165	92
	inch	7	0,06	0,14	0,83	2,91	6,5	3,62
3“	mm	203	1,5	3	25,5	86,4	179	127
	inch	8	0,06	0,12	1	3,4	7,05	5
4“	mm	229	2	4	26,5	106,9	222	157
	inch	9	0,08	0,16	1,04	4,21	8,74	6,18
6“*	mm	267	2	4	28,0	141,4	-	208
	inch	10,5	0,08	0,16	1,1	5,57	-	8,19

DN / ANSI		ØD	R	Øk	nxd2	weight	
½“	mm	88,9	260	60,5	4x16	kg	3,7
	inch	3,50	10,24	2,38	4x0,63	lbs	8,2
¾“	mm	98,6	260	69,9	4x16	kg	4,1
	inch	3,88	10,24	2,75	4x0,63	lbs	9,0
1“	mm	107,9	260	79,2	4x16	kg	4,9
	inch	4,25	10,24	3,12	4x0,63	lbs	10,8
1½“	mm	127	260	98,6	4x16	kg	7,4
	inch	5	10,24	3,88	4x0,63	lbs	16,3
2“	mm	152,4	410	120,7	4x19	kg	11,3
	inch	6	16,14	4,75	4x0,75	lbs	24,9
3“	mm	190,5	410	152,4	4x19	kg	17,5
	inch	7,5	16,14	6	4x0,75	lbs	38,6
4“	mm	228,6	674	190,5	8x19	kg	31,1
	inch	9	26,54	7,5	8x0,75	lbs	68,5
6“*	mm	282	-	240,5	8x23	kg	43,2
	inch	11,1	-	9,5	8x0,91	lbs	95,2

* Gear operated

FLOWSERVE
Ahaus GmbH
von-Braun-Straße 19a
D-48683 Ahaus
Postfach 1162 D-48661 Ahaus
Telefon: +49(0) 2561-686-100
Fax: +49(0) 2561-686-200

Your distribution partner:
Blindeisenweg 31 • D-41468 Neuss • Tel.: +49 2131 / 15 39 28-0 • Fax: +49 2131 / 15 39 28-99 • info@fergo.eu • www.fergo.eu

Technical Data T4E-1
DN8“ to DN14“

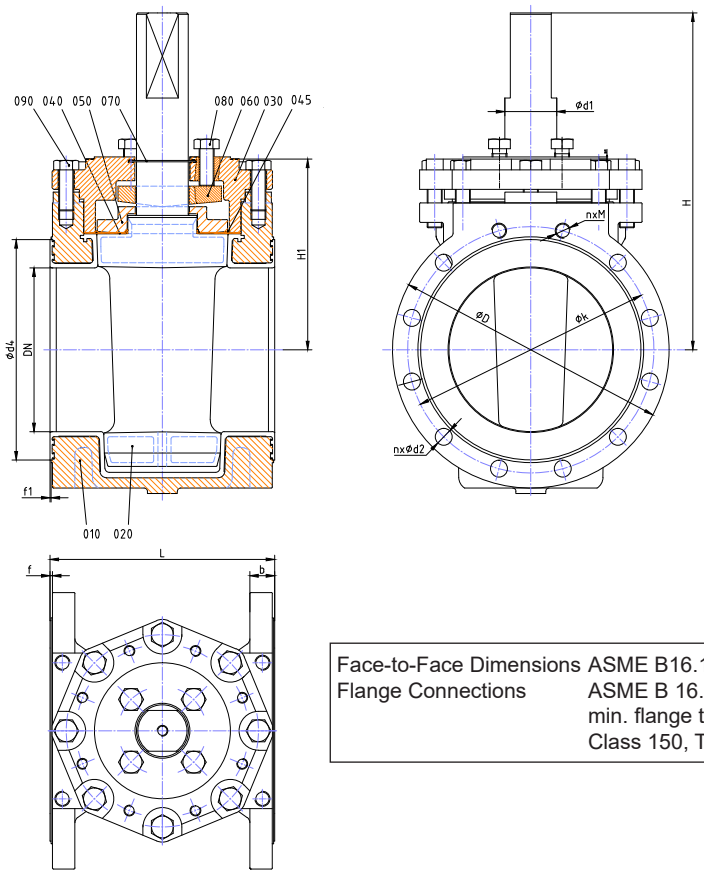

Face-to-Face Dimensions	ASME B16.10 (Short Pattern)
Flange Connections	ASME B 16.5 (CL150) min. flange thickness to ASME Class 150, Table 9 (Flange Fittings)

DN / ANSI		L	f1	f	b	H1	H	Ød4
8“	mm	292,1	2	4	27,5	235,4	402	262
	inch	11,5	0,08	0,16	1,08	9,27	15,83	10,31
10“	mm	330,2	2	4	37	280,2	495,0	316
	inch	13	0,08	0,16	1,46	11	19	12,44
12“	mm	355,6	2	4	40	301,6	517	381
	inch	14	0,08	0,16	1,57	11,87	20,35	15
14“	mm	381	2,5	4,5	38,5	327	542	413
	inch	15	0,1	0,18	1,52	12,87	21,34	16,26

DN / ANSI		ØD	Øk	nxØd2	Ød1	nxM	weight	
8“	mm	342,9	298,5	6x22	63,4	2xUNC 3/4“	kg	157,0
	inch	13,5	11,75	6x0,87	2,5		lbs	346,1
10“	mm	406,4	362	10x25	76,2	2xUNC 7/8“	kg	190,0
	inch	16	14,25	10x0,98	3		lbs	418,9
12“	mm	482,6	432	10x25	76,2	2xUNC 7/8“	kg	220,0
	inch	19	17,01	10x0,98	3		lbs	485,0
14“	mm	534	476,5	12x28,5	76,2	-	kg	246,0
	inch	21,02	18,76	12x1,12	3		lbs	542,3

FLOWSERVE
Ahaus GmbH
von-Braun-Straße 19a
D-48683 Ahaus
Postfach 1162 D-48661 Ahaus
Telefon: +49(0) 2561-686-100
Fax: +49(0) 2561-686-200

Your distribution partner:
fergo
Blindeisenweg 31 • D-41468 Neuss • Tel.: +49 2131 / 15 39 28-0 • Fax: +49 2131 / 15 39 28-99 • info@fergo.eu • www.fergo.eu

Technical Data T4E-2
DN15 to DN150

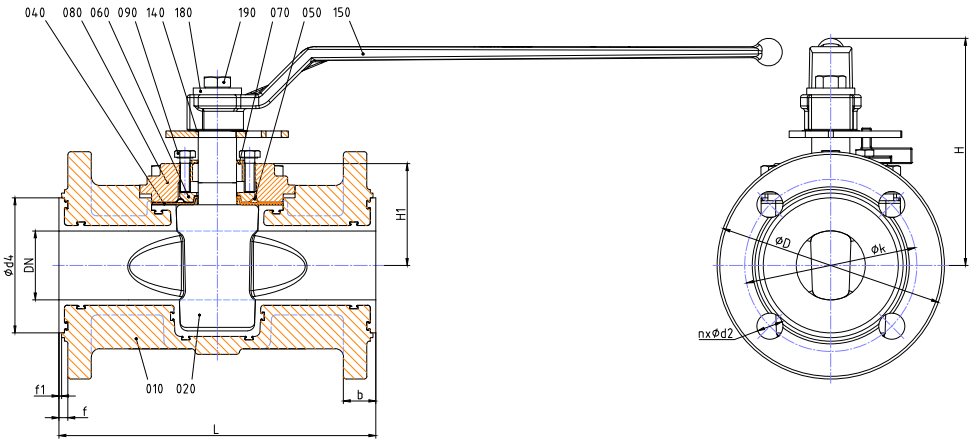

Face-to-Face Dimensions DIN EN 558 (Basic series 1)
Flange Connections DIN EN 1092-2 (PN16)

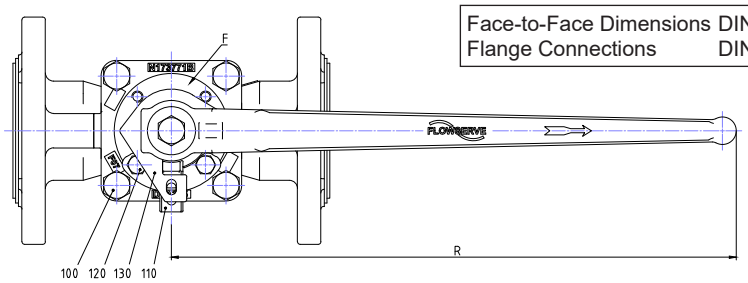

DN / DIN		L	f1	f	b	H1	H	Ød4
015	mm	130	2	6	18	53,8	139	42
	inch	5,12	0,08	0,24	0,71	2,12	5,47	1,65
020	mm	150	2	6	22	53,8	139	56
	inch	5,91	0,08	0,24	0,87	2,12	5,47	2,2
025	mm	160	2	6,5	20,5	53,8	139	65
	inch	6,3	0,08	0,26	0,81	2,12	5,47	2,56
040	mm	200	2	6,5	21,5	62,9	145	85
	inch	7,87	0,08	0,26	0,85	2,48	5,71	3,35
050	mm	230	2	6,5	23,5	73,8	165	98
	inch	9,06	0,08	0,26	0,93	2,91	6,5	3,86
080	mm	310	2,0	7	26	86,4	179	133
	inch	12,2	0,08	0,28	1,02	3,4	7,05	5,24
100	mm	350	2	7	28	106,9	222	152
	inch	13,78	0,08	0,28	1,1	4,21	8,74	5,98
150 *	mm	267	2	4	28	141,4	-	208
	inch	10,51	0,08	0,16	1,1	5,57	-	8,19

DN / DIN		ØD	R	Øk	nxd2	weight	
015	mm	95	260	65	4x14	kg	4,2
	inch	3,74	10,24	2,56	4x0,55	lbs	9,3
020	mm	105	260	75	4x14	kg	4,9
	inch	4,13	10,24	2,95	4x0,55	lbs	10,8
025	mm	115	260	85	4x14	kg	5,8
	inch	4,53	10,24	3,35	4x0,55	lbs	12,8
040	mm	150	260	110	4x19	kg	9,1
	inch	5,91	10,24	4,33	4x0,75	lbs	20,1
050	mm	165	410	125	4x19	kg	13,2
	inch	6,5	16,14	4,92	4x0,75	lbs	29,1
080	mm	200	410	160	8x19	kg	20,8
	inch	7,87	16,14	6,3	8x0,75	lbs	45,8
100	mm	220	674	180	8x19	kg	34,7
	inch	8,66	26,54	7,09	8x0,75	lbs	76,5
150 *	mm	282	-	240,5	8x23	kg	43,2
	inch	11,1	-	9,47	8x0,91	lbs	95,2

* Face-to-Face Dimensions acc. ASME B 16.10 (Short Pattern) & Gear operated

FLOWSERVE
Ahaus GmbH
von-Braun-Straße 19a
D-48683 Ahaus
Postfach 1162 D-48661 Ahaus
Telefon: +49(0) 2561-686-100
Fax: +49(0) 2561-686-200

Your distribution partner:
Blindeisenweg 31 • D-41468 Neuss • Tel.: +49 2131 / 15 39 28-0 • Fax: +49 2131 / 15 39 28-99 • info@fergo.eu • www.fergo.eu

Technical Data T4E-2
DN200 to DN300

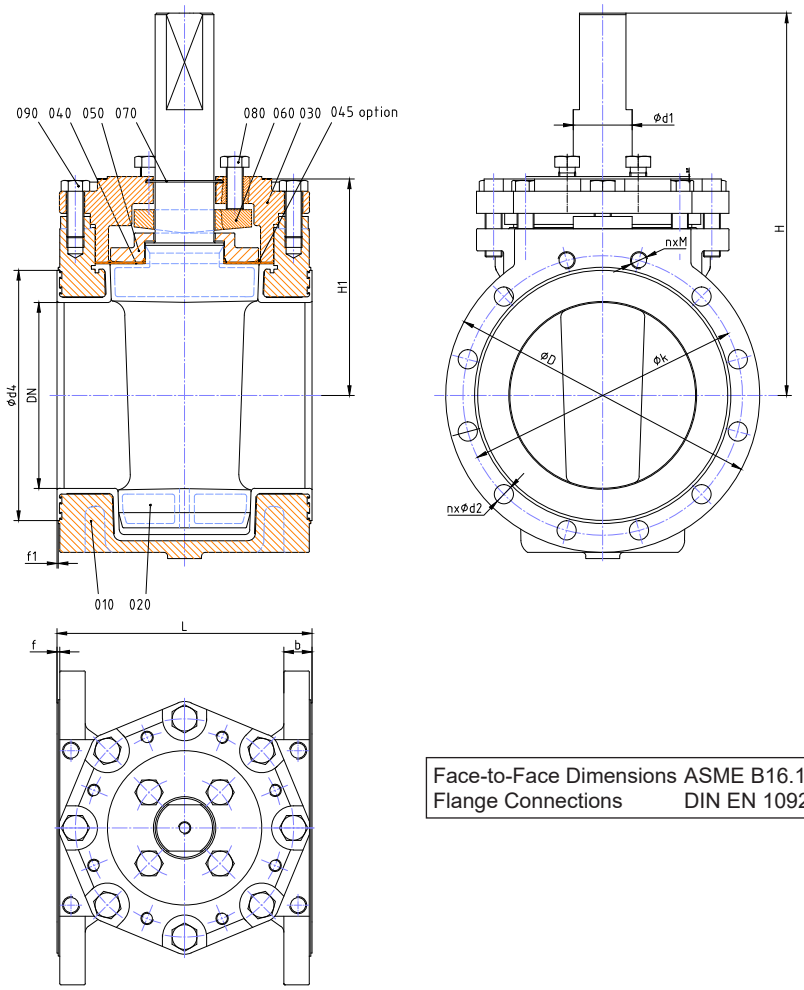

Face-to-Face Dimensions	ASME B16.10 (Short Pattern)
Flange Connections	DIN EN 1092-2 (PN10)

DN / DIN		L	f1	f	b	H1	H	Ød4
200	mm	292,1	2	4	27,5	235,4	402	262
	inch	11,5	0,08	0,16	1,08	9,27	15,83	10,31
250	mm	330,2	2	4	37	280,2	495,0	316
	inch	13	0,08	0,16	1,46	11	19	12,44
300	mm	355,6	2	4	40	301,6	517	381
	inch	14	0,08	0,16	1,57	11,87	20,35	15

DN / DIN		ØD	Øk	nxd2	Ød1	nxM	weight	
200	mm	342,9	295	6x22	63,4	2xM20	kg	157,0
	inch	13,5	11,61	6x0,87	2,5		lbs	346,1
250	mm	406,4	350	10x22	76,2	2xM20	kg	190,0
	inch	16	13,78	10x0,87	3		lbs	418,9
300	mm	482,6	400	10x22	76,2	2xM20	kg	220,0
	inch	19	15,75	10x0,87	3		lbs	485,0

FLOWSERVE
Ahaus GmbH
von-Braun-Straße 19a
D-48683 Ahaus
Postfach 1162 D-48661 Ahaus
Telefon: +49(0) 2561-686-100
Fax: +49(0) 2561-686-200

Your distribution partner:
fergo
Blindeisenweg 31 • D-41468 Neuss • Tel.: +49 2131 / 15 39 28-0 • Fax: +49 2131 / 15 39 28-99 • info@fergo.eu • www.fergo.eu

Technical Data T4E-3
DN½“ to DN6“

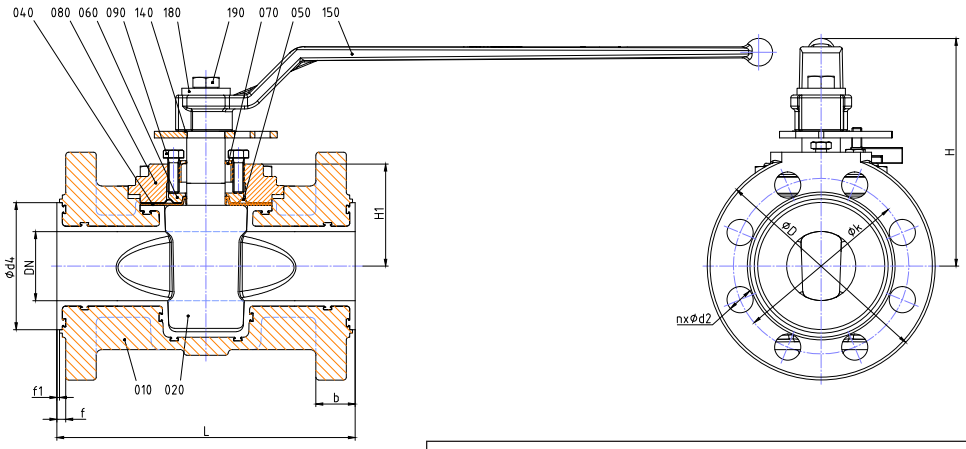

Face-to-Face Dimensions ASME B 16.10
Flange Connections ASME B 16.5 (CL300)
min. flange thickness to ASME
Class 300, Table 12 (Flange Fittings)

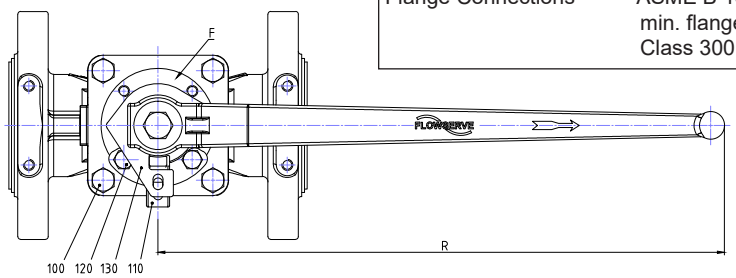

DN / ANSI		L	f1	f	b	H1	H	Ød4
½“	mm	139,5	2	4	17	53,8	139	36
	inch	5,5	0,08	0,16	0,67	2,12	5,47	1,42
¾“	mm	152,5	2	6	21,5	53,8	139	43
	inch	6	0,08	0,24	0,85	2,12	5,47	1,69
1“	mm	165	2	6,5	22,5	53,8	139	51
	inch	6,5	0,08	0,26	0,89	2,12	5,47	2,01
1½“	mm	190,5	2	6,5	25,5	62,9	145	73
	inch	7,5	0,08	0,26	1	2,48	5,71	2,87
2“	mm	216	2	6,5	28,5	73,8	165	92
	inch	8,5	0,08	0,26	1,12	2,91	6,5	3,62
3“	mm	282,5	2	7	34	86,4	179	127
	inch	11,12	0,08	0,28	1,34	3,4	7,05	5,00
4“	mm	305	2	7	37	106,9	222	157
	inch	12	0,08	0,28	1,46	4,21	8,74	6,18
6“ *	mm	403,5	2	7	42	141,4	-	208
	inch	15,88	0,08	0,28	1,65	5,57	-	8,19

DN / ANSI		ØD	R	Øk	nxd2	weight	
½“	mm	95	260	66,5	4x16	kg	4,5
	inch	3,74	10,24	2,6	4x0,63	lbs	9,9
¾“	mm	117,3	260	82,5	4x19	kg	5,6
	inch	4,62	10,24	3,25	4x0,75	lbs	12,3
1“	mm	123,9	260	88,9	4x19	kg	6,5
	inch	4,88	10,24	3,5	4x0,75	lbs	14,3
1½“	mm	155,4	260	114,3	4x22,5	kg	10,1
	inch	6,12	10,24	4,5	4x0,89	lbs	22,3
2“	mm	165	410	127	8x19	kg	14,0
	inch	6,5	16,14	5	8x0,75	lbs	30,9
3“	mm	209,5	410	168	8x22,5	kg	23,7
	inch	8,25	16,14	6,61	8x0,89	lbs	52,2
4“	mm	254	674	200	8x22,5	kg	42,4
	inch	10	26,54	7,87	8x0,89	lbs	93,4
6“ *	mm	317,5	-	269,7	12x22,5	kg	69,2
	inch	12,5	-	10,62	12x0,89	lbs	152,5

* Gear operated

FLOWSERVE
Ahaus GmbH
von-Braun-Straße 19a
D-48683 Ahaus
Postfach 1162 D-48661 Ahaus
Telefon: +49(0) 2561-686-100
Fax: +49(0) 2561-686-200

Your distribution partner:
Blindeisenweg 31 • D-41468 Neuss • Tel.: +49 2131 / 15 39 28-0 • Fax: +49 2131 / 15 39 28-99 • info@fergo.eu • www.fergo.eu

Technical Data T4E-3
DN8“, 10“

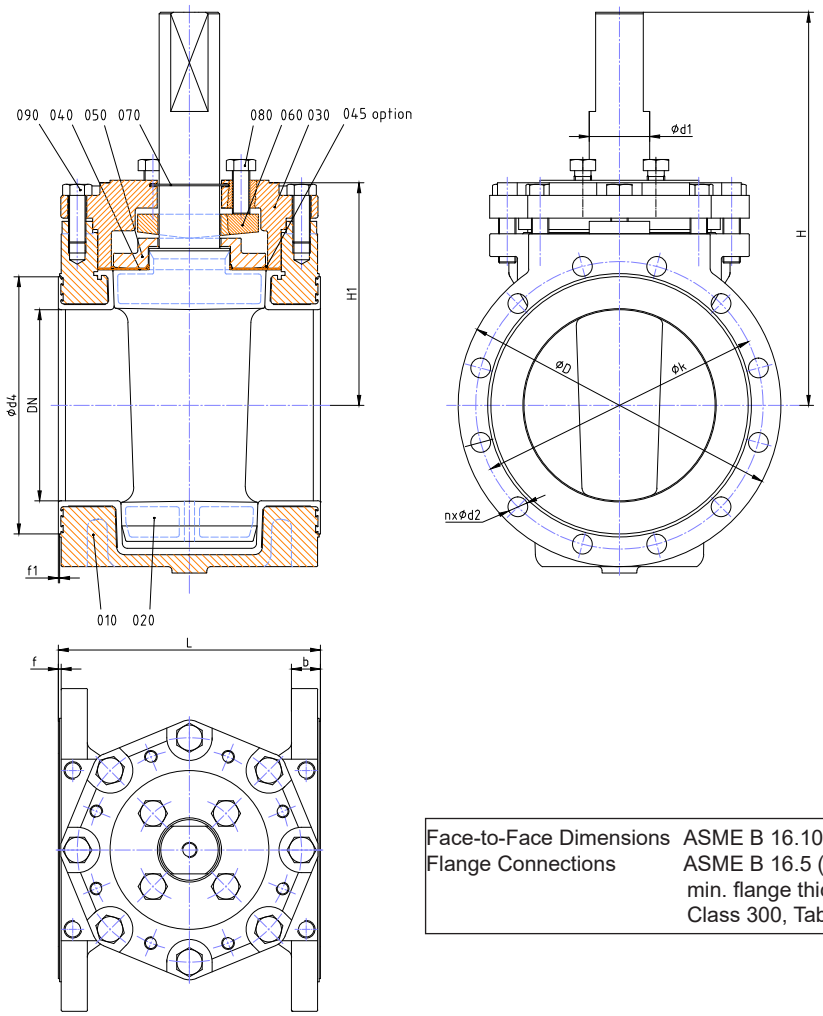

Face-to-Face Dimensions	ASME B 16.10
Flange Connections	ASME B 16.5 (CL300) min. flange thickness to ASME Class 300, Table 12 (Flange Fittings)

DN / ANSI		L	f1	f	b	H	H1	Ød4
8“	mm	419	2	4	43	402	235,4	262
	inch	16,5	0,08	0,16	1,69	15,83	9,27	10,31
10“	mm	457	2	4	50	495	280,3	316
	inch	18	0,08	0,16	1,97	19,49	11,04	12,44
12“	mm	502	2	4	53	518	301,6	381
	inch	19,8	0,08	0,16	2,09	20,39	11,87	15

DN / ANSI		ØD	Øk	nxd2	Ød1	weight	
8“	mm	381	330,2	12x25,4	63,4	kg	156,0
	inch	15	13	12x1	2,5	lbs	343,9
10“	mm	445	387,5	16x28,5	76,2	kg	216,0
	inch	17,5	15,26	16x1,12	3	lbs	476,2
12“	mm	521	451,0	16x32	76,2	kg	285,0
	inch	20,51	17,76	16x1,26	3	lbs	628,3

Your distribution partner:
fergo
Blindeiserweg 31 • D-41468 Neuss • Tel.: +49 2131 / 15 39 28-0 • Fax: +49 2131 / 15 39 28-99 • info@fergo.eu • www.fergo.eu

Material specification T4E-1 DN½“ to DN6“

No.	Designation	Pieces	Material	Material-No. / DIN
010	body	1	DCI ASTM A395 / PFA lined	0.7043 / DIN EN 1563
020	plug	1	DCI ASTM A395 / PFA lined	0.7043 / DIN EN 1563
040	diaphragm	1	PFA	
050*	metal diaphragm	1	stainless steel 302	1.4310
060	thrust gland	1	stainless steel 316Ti	1.4571
070	grounding spring	1	stainless steel 302	1.4310
080	top cap	1	DCI ASTM A395	0.7043 / DIN EN 1563
090	adjuster bolt	1 set	ASTM A193 GRADE B7	
100	top cap bolt	1 set	ASTM A193 GRADE B7	
110	stop	1	ASTM A351/A744 Grade CF-8M (316 SS)	1.4408 / DIN EN 10213-4
120	stop fastener	1 set	stainless steel	1.4301 / DIN EN 10088-3
130	stop collar	1	carbon steel, protective plated	
140	stop collar retainer	1	stainless steel 302	1.4310
150	wrench	1	EN-JS1082 (GGG-50)	0.7050 / DIN EN 1563
180	washer	1	stainless steel 304	1.4301 / DIN EN 10088-3
190	hexagon bolt	1	stainless steel	1.4301 / DIN EN 10088-3

*optional

Material specification T4E-1 DN8“ to DN14“

➤ Ductile Cast Iron

No.	Designation	Pieces	Material	Material-No. / DIN
010	body	1	DCI ASTM A395 / PFA lined *DN14“* - ASTM A216 Grade WCB / PFA lined	0.7043 / DIN EN 1563 *DN14“* - ~1.0619 / DIN EN 10213-2
020	plug	1	DCI ASTM A395 / PFA lined *DN14“* - ASTM A216 Grade WCB / PFA lined	0.7043 / DIN EN 1563 *DN14“* - ~1.0619 / DIN EN 10213-2
030	top cap	1	DCI ASTM A395	0.7043 / DIN EN 1563
040	diaphragm	1	PFA	
050	thrust gland	1	ASTM A995 Gr CD4MCuN	1.4517
060	adjuster	1	ASTM A995 Gr CD4MCuN	,1.4517
070	grounding spring	1	stainless steel 302	1.4310
080	adjuster bolt	1 set	stainless steel	1.4301 / DIN EN 10088-3
090	hexagon bolt	1 set	stainless steel	1.4301 / DIN EN 10088-3

*optional

➤ Stainless Steel

No.	Designation	Pieces	Material	Material-No. / DIN
010	body	1	ASTM A744 Gr. CF-8M / PFA lined	1.4408 / DIN EN 10213-4
020	plug	1	ASTM A995 Gr CD4MCuN / PFA lined	
030	top cap	1	ASTM A995 Gr CD4MCuN	
040	diaphragm	1	PFA	
045*	metal diaphragm	1	C276 Hastelloy	
050	thrust gland	1	ASTM A995 Gr CD4MCuN	1.4517
060	adjuster	1	ASTM A995 Gr CD4MCuN	1.4517
070	grounding spring	1	stainless steel 302	1.4310
080	adjuster bolt	1 set	stainless steel	1.4301 / DIN EN 10088-3
090	hexagon bolt	1 set	stainless steel	1.4301 / DIN EN 10088-3

*optional

Your distribution partner:
Blindeisenweg 31 • D-41468 Neuss • Tel.: +49 2131 / 15 39 28-0 • Fax: +49 2131 / 15 39 28-99 • info@fergo.eu • www.fergo.eu

Material specificationT4E-2 DN15 to DN150

No.	Designation	Pieces	Material	Material-No. / DIN
010	body	1	DCI ASTM A395 / PFA lined	0.7043 / DIN EN 1563
020	plug	1	DCI ASTM A395 / PFA lined	0.7043 / DIN EN 1563
040	diaphragm	1	PFA	
050*	metal diaphragm	1	stainless steel 302	1.4310
060	thrust gland	1	stainless steel 316Ti	1.4571
070	grounding spring	1	stainless steel 302	1.4310
080	top cap	1	DCI ASTM A395	0.7043 / DIN EN 1563
090	adjuster bolt	1 set	stainless steel	1.4301 / DIN EN 10088-3
100	top cap bolt	1 set	stainless steel	1.4301 / DIN EN 10088-3
110	stop	1	ASTM A351/A744 Grade CF-8M (316 SS)	1.4408 / DIN EN 10213-4
120	stop fastener	1 set	stainless steel	1.4301 / DIN EN 10088-3
130	stop collar	1	carbon steel, protective plated	
140	stop collar retainer	1	stainless steel 302	1.4310
150	wrench	1	EN-JS1082 (GGG-50)	0.7050 / DIN EN 1563
180	washer	1	stainless steel 304	1.4301 / DIN EN 10088-3
190	hexagon bolt	1	stainless steel	1.4301 / DIN EN 10088-3

*optional

Material specificationT4E-2 DN200 to DN300

➤ Ductile Cast Iron

No.	Designation	Pieces	Material	Material-No. / DIN
010	body	1	DCI ASTM A395 / PFA lined	0.7043 / DIN EN 1563
020	plug	1	DCI ASTM A395 / PFA lined	0.7043 / DIN EN 1563
030	top cap	1	DCI ASTM A395	0.7043 / DIN EN 1563
040	diaphragm	1	PFA	
050	thrust gland	1	ASTM A995 Gr CD4MCuN	1.4517
060	Adjuster	1	ASTM A995 Gr CD4MCuN	1.4517
070	grounding spring	1	stainless steel 302	1.4310
080	adjuster bolt	1 set	stainless steel	1.4301 / DIN EN 10088-3
090	hexagon bolt	1 set	stainless steel	1.4301 / DIN EN 10088-3

*optional

➤ Stainless Steel

No.	Designation	Pieces	Material	Material-No. / DIN
010	body	1	ASTM A744 Gr. CF-8M / PFA lined	1.4408 / DIN EN 10213-4
020	plug	1	ASTM A995 Gr CD4MCuN / PFA lined	
030	top cap	1	ASTM A995 Gr CD4MCuN	
040	diaphragm	1	PFA	
045*	metal diaphragm	1	C276 Hastelloy	
050	thrust gland	1	ASTM A995 Gr CD4MCuN	1.4517
060	adjuster	1	ASTM A995 Gr CD4MCuN	1.4517
070	grounding spring	1	stainless steel 302	1.4310
080	adjuster bolt	1 set	stainless steel	1.4301 / DIN EN 10088-3
090	hexagon bolt	1 set	stainless steel	1.4301 / DIN EN 10088-3

*optional

Your distribution partner:
fergo
Blindeiserweg 31 • D-41468 Neuss • Tel.: +49 2131 / 15 39 28-0 • Fax: +49 2131 / 15 39 28-99 • info@fergo.eu • www.fergo.eu

Material specificationT4E-3
DN½“ to DN6“

No.	Designation	Pieces	Material	Material-No. / DIN
010	body	1	ASTM A216 Grade WCB / PFA lined	~1.0619 / DIN EN 10213-2
020	plug	1	DCI ASTM A395 / PFA lined	0.7043 / DIN EN 1563
040	diaphragm	1	PFA	
050*	metal diaphragm	1	stainless steel 302	1.4310
060	thrust gland	1	stainless steel 316Ti	1.4571
070	grounding spring	1	stainless steel 302	1.4310
080	top cap			
	DN½“, DN¾“	1	ASTM A216 Grade WCB	~1.0619 / DIN EN 10213-2
	DN1“ - DN6“	1	ASTM A351 Gr CD4MCuN	
090	adjuster bolt	1 set	ASTM A193 GRADE B7	~1.7225 / DIN EN 10083-1
100	top cap bolt	1 set	ASTM A193 GRADE B7	~1.7225 / DIN EN 10083-1
110	stop	1	ASTM A351/A744 Grade CF-8M (316 SS)	1.4408 / DIN EN 10213-4
120	stop fastener	1 set	stainless steel	1.4301 / DIN EN 10088-3
130	stop collar	1	carbon steel, protective plated	
140	stop collar retainer	1	stainless steel 302	1.4310
150	wrench	1	EN-JS1082 (GGG-50)	0.7050 / DIN EN 1563
180	washer	1	stainless steel 304	1.4301 / DIN EN 10088-3
190	hexagon bolt	1	stainless steel	1.4301 / DIN EN 10088-3

* optional

Material specification T4E-3
DN8“, 10“

No.	Designation	Pieces	Material	Material-No. / DIN
010	body	1	ASTM A216 Grade WCB / PFA lined	~1.0619 / DIN EN 10213-2
020	plug	1	DCI ASTM A395 / PFA lined	0.7043 / DIN EN 1563
030	top cap	1	duplex stainless steel	1.4463
040	diaphragm	1	PFA	
045*	metal diaphragm	1	C276 Hastelloy	
050	thrust gland	1	ASTM A995 Gr CD4MCuN	1.4517
060	adjuster	1	ASTM A995 Gr CD4MCuN	1.4517
070	grounding spring	1	stainless steel 302	1.4310
080	adjuster bolt	1 set	Class 8.8 (yellow chromated)	
090	hexagon bolt	1 set	Class 8.8 (yellow chromated)	

* optional

Your distribution partner:
Bindeisenweg 31 • D-41468 Neuss • Tel.: +49 2131 / 15 39 28-0 • Fax: +49 2131 / 15 39 28-99 • info@fergo.eu • www.fergo.eu

Spare Parts (Item.-No.) T4E

size		repair kit	repair kit includes following parts		
			diaphragm PFA	grounding spring	diaphragm guide
1/2"	015	80-0057710	80-0031400	80-0025777	80-0013870
3/4"	020	80-0057711	80-0031400	80-0025777	80-0013870
1"	025	80-0043928	80-0025754	80-0025777	80-0013870
1 1/2"	040	80-0055436	80-0025755	80-0025777	80-0013870
2"	050	80-0055437	80-0025756	80-0025778	80-0014405
3"	080	80-0043929	80-0025703	80-0025779	80-0014405
4"	100	80-0043930	80-0025757	80-0025780	80-0015484
6"	150	80-0055438	80-0025758	80-0025781	80-0015484
8"	200	80-0057712	80-0021482	80-0021486	80-0048287
10"	250	80-0055439	80-0051193	80-0013883	80-0055476
12"	300	80-0057713	80-0051004	80-0013883	80-0055476
14"	-	-	80-0065028	80-0013883	80-0055476

Your distribution partner:
fergo
Blindeiserweg 31 • D-41468 Neuss • Tel.: +49 2131 / 15 39 28-0 • Fax: +49 2131 / 15 39 28-99 • info@fergo.eu • www.fergo.eu

Assembly instructions T4E

The general installation and maintenance instructions must be observed.

1. Plug Subassembly:
   - 1.1 Assemble diaphragm **(040)** over the plug stem **(020)** with the aid of diaphragm guide.
   - 1.2 Place metal diaphragm **(050)** (optional) and thrust gland **(060)** over the plug stem and slide it down to the diaphragm.
   - 1.3 Remove the guide.
2. Top Cap Subassembly:
   - 2.1 Adjusting the hexagon bolts **(090)** with the screw lock medium-strength, apply in a ring shape to the thread and so the bottom of the thrust gland is flush with the bottom face of the top cap **(080).**
   - 2.2 Assemble the stop **(110)** using the hexagon bolts **(120).**
   - 2.3 Place the grounding spring **(070)** into the top cap **(080)**.
3. Apply a thin, even film of silicone to the entire outside surface of the plug.
4. Place the pre-assembled plug into the body. The plug ports shall be lined up in the open position.
5. Slide the pre-assembled top cap over the plug stem down until it rests on the thrust gland.
6. Place the four bolts **(100)** and tighten them using the criss-cross method according the recommended torques.
7. Loosen the adjuster bolts (¼-½ turn) and rotate the plug three times to make it move upward.
8. Retighten the adjuster bolts alternately in ¼ turn increments until the recommended torques are reached. Ensure same height of bolts after tightening.
9. Open and close the valve a couple of times to make sure the stops lines the plug ports properly with the runs in the body.
10. Slide the stop collar **(130)** over the stem afterwards place the stop collar retainer **(140)**.
11. Place the wrench **(150)** and fasten it by using the washer **(180)** and the bolt **(190)**.
12. All valves shall be seat tested in both flow directions.

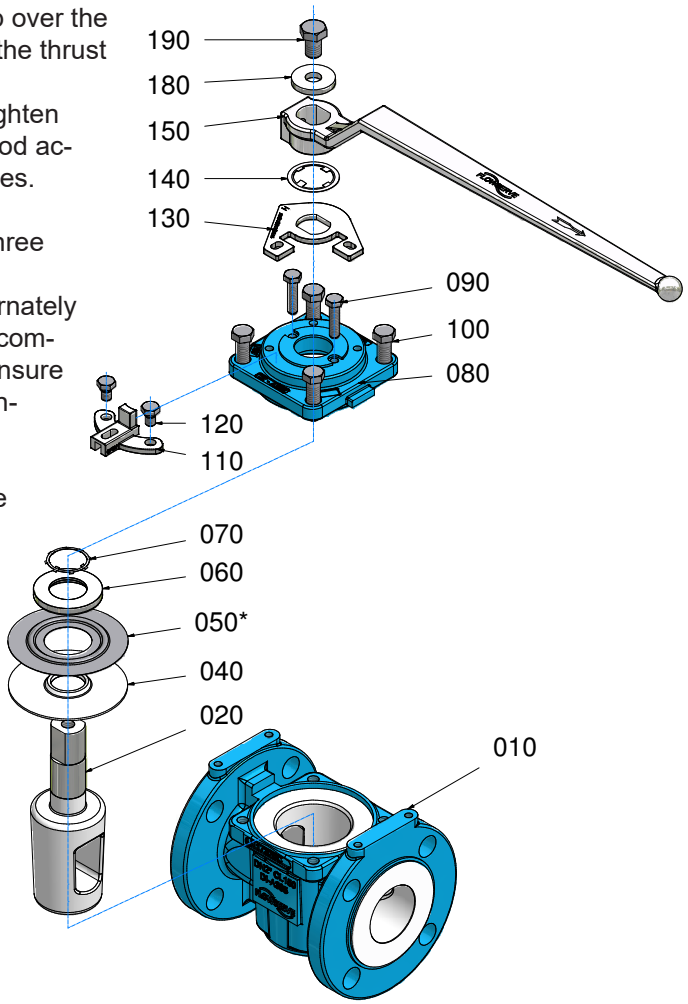

Your distribution partner:
Bindeisenweg 31 • D-41468 Neuss • Tel.: +49 2131 / 15 39 28-0 • Fax: +49 2131 / 15 39 28-99 • info@fergo.eu • www.fergo.eu

Disassembly instructions T4E

For all jobs which are to be carried out on an installed valve, the works safety requirements and the general accident prevention instructions must be observed. Moreover, the general installation and maintenance instructions for atomac fluorcarbon resin lined valves must be considered.

1. Prior to disassembly, the valve must be cleaned of all fluid according to the above-mentioned instructions. Particular care must be taken that during rinsing and draining of the piping, the valve is opened and closed repeatedly. These cycles (opening and closing) are to be repeated during draining of the piping. Only when following this procedure, it is ensured that all remaining pressure inside the body is eliminated.
2. For disassemble the valve put the body on a work bench with a soft cover (rubber mat).
3. Disassemble the wrench by removing the bolt **(190)** and washer **(180)**.
4. By pushing up the stop collar **(130)** the stop collar retainer **(140)** can easily be removed.
5. Unscrew the top cap bolts **(100)** and remove the top cap **(080)** from the body **(010)**.
6. Turn the plug **(020)** several timer to make it move upwards.
7. Remove the grounding spring **(070)**, thrust gland **(060)**, metal diaphragm **(050)** (optional) and the diaphragm **(040)**.
8. If necessary the stop **(110)** can be removed by unscrew the stop fasteners **(120)**.

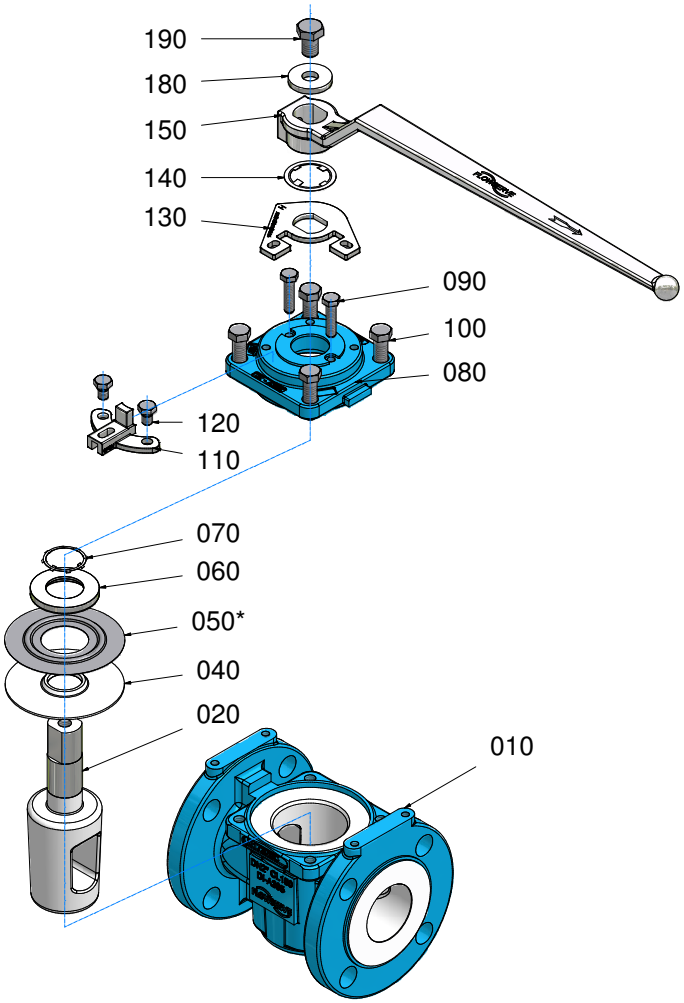

Your distribution partner:
fergo
Blindeiserweg 31 • D-41468 Neuss • Tel.: +49 2131 / 15 39 28-0 • Fax: +49 2131 / 15 39 28-99 • info@fergo.eu • www.fergo.eu

T4E Installation Instructions

1. The protective flange covers provided on each valve should remain in place during any storage or handling operations.

2. Gaskets are not required for the T4E valve since the valve liner itself forms a gasket on both flange faces. Gaskets may be used, however, for protection of the liner where frequent disassembly of the associated piping may be required. Gaskets are recommended when the valve is to be installed between smooth face (ground or rigid plastic) or glass lined pipe flanges.

3. Care should be used to protect the body liner **(010)** and the plug **(020)** (where appropriate) from damage during handling.

4. When installing the valve between flanges, care should be exercised to note that the body **(010)** liner not be allowed to catch on the pipe I.D. and fold over. This will cause severe liner damage and result in flange leakage.

5. When tightening the flange bolts, normal wrench torque may be used without fear of damage to the valve or liner.

6. Do not run sharp instruments between the valve body **(010)** and the liner, the liner and the pipe, or between the plug **(020)** and the liner. This practice will result in severe liner and/or plug **(020)** damage.

7. Valves are 100% pneumatically seat tested at factory

8. *Plug* **(020)** *adjustment at installation should not be required and is not recommended. Increased operating torque will result.*

9. *It is imperative that top cap fasteners* **(100)** *be re-torqued prior to installation.* Top cap fasteners **(100)** should be torqued in a crisscross pattern and repeated until desired torque is achieved for all fasteners. (Reference, fastener torque data, page16.)

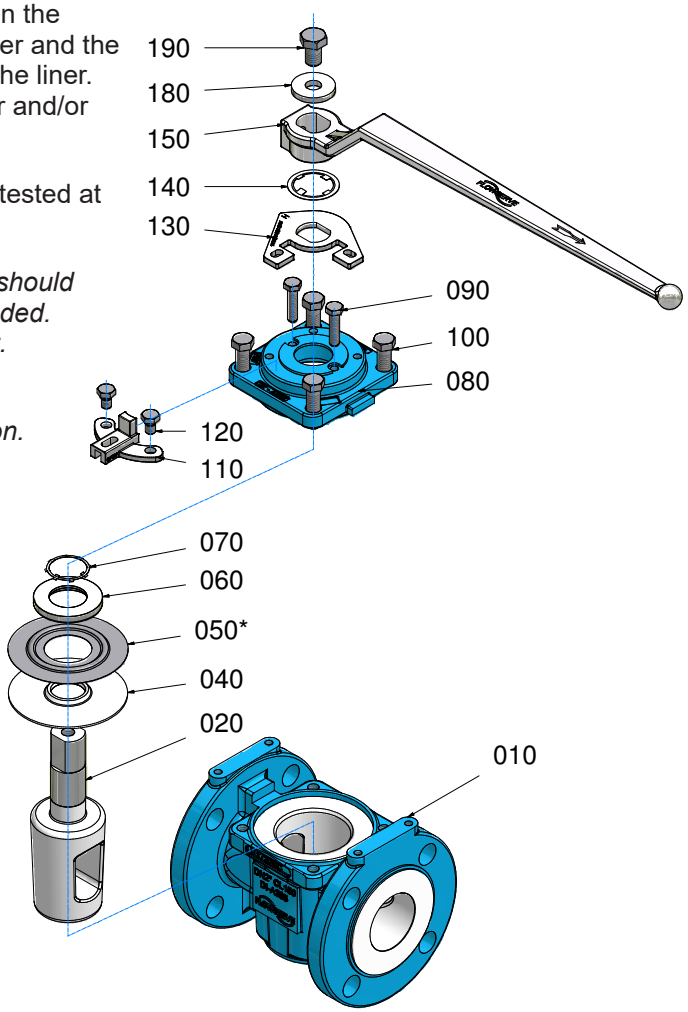

SPECIAL NOTE:
Consult the piping specifications for proper flange torque and installation procedures. Over torquing may damage the gasket surface. When mating dissimilar materials, use the lower torque value.

Valves may require adjustment to remain drop tight when operating at the lower end of the temperature range or on extreme temperature cycles.

Your distribution partner:
Blindeisenweg 31 • D-41468 Neuss • Tel.: +49 2131 / 15 39 28-0 • Fax: +49 2131 / 15 39 28-99 • info@fergo.eu • www.fergo.eu

T4E Operating/Maintenance Instructions

Maintenance requirements for T4E-1 and T4E-3 valves may vary due to operating conditions of the process. Factors such as operating temperature, pressure, solids contents, and frequency of cycling can influence valve performance and maintenance requirements.

Seal wear is compensated by adjusting appropriate parts. For T-41 and T-43 valves, there are three possible leak paths:

1. Top Cap (bonnet) **(080)**
2. Stem of plug **(020)**
3. Line (through) **(010 & 020)**

Corresponding adjustments for each leak path are as follows:

1. Top Cap (bonnet) (080)

Leakage due to thermal or pressure cycling is eliminated by snugging the top cap fasteners **(100)** in a “crisscross” pattern repeated until consistent torque achieved for all fasteners. This adjustment is most effective when the valve is not pressurized. It is important that the top cap fasteners **(100)** not be tightened excessively and the torque values applied are within the recommended tightening torque, page16.

2. Stem of Plug (010 & 020)

Leakage due to wear of the diaphragm **(040)**, and/or wear to the body liner (primary seal) is eliminated by tightening the adjuster fasteners **(090)** in 1/4 turn increments. It is recommended that the adjuster fasteners **(090)** be tightened evenly. The valve should be operated between adjustments to assure that the plug **(020)** properly seats itself into the body liner. If leakage persists after repeated adjustments, the diaphragm **(040)** will require replacement.

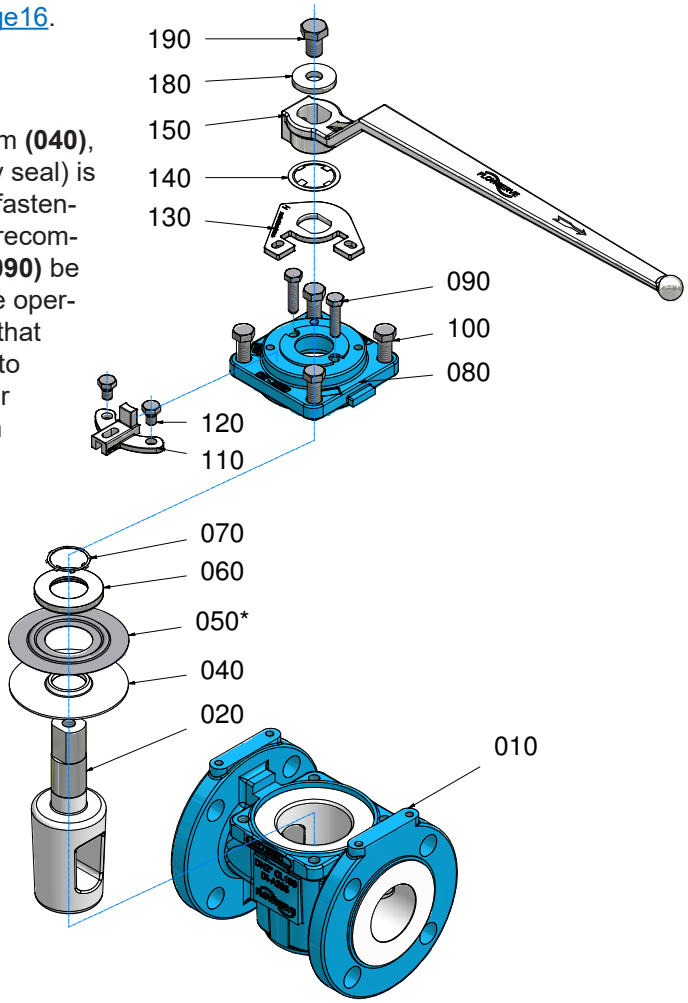

3. Line (through)

Through leakage due to wear of the primary seal can be eliminated by tightening the adjuster fasteners **(090)** in 1/4 turn increments. It is recommended that the fasteners be tightened evenly. The valve should be operated during adjustments to prevent excessive operating torque.

Fastener Torque
(Reference, fastener torque data, page16.)

Your distribution partner:
fergo
Blindeiserweg 31 • D-41468 Neuss • Tel.: +49 2131 / 15 39 28-0 • Fax: +49 2131 / 15 39 28-99 • info@fergo.eu • www.fergo.eu

T4E-1 & T4E-2 - recommended Tightening Torques for Top Cap and Adjuster Boltings* (CL150 & PN16)

DN		top cap bolts (100) ≥ DN 8“/200 (090) Appply Loctite 222 or Weiconlock AN 302/22 to the threads			adjuster bolts (090) ≥ DN 8“/200 (080)		
		quantity	Nm	lbf · in	quantity	Nm	lbf · in
015	½“	4	10	89	2	4	35
020	¾“	4	10	89	2	4	35
025	1“	4	31	274	2	4	35
040	1½“	4	31	274	2	4	35
050	2“	4	45	398	2	4	35
080	3“	4	66	584	2	6	53
100	4“	4	94	832	2	8	71
150	6“	4	190	1682	2	17	150
200	8“	6	110	974	2	20	177
250	10“	8	140	1239	4	30	266
300	12“	8	155	1372	4	30	266
-	14“	8	135	1195	4	30	266

** maximum values*

T4E-3 - recommended Tightening Torques for Top Cap and Adjuster Boltings* (CL300)

DN	top cap bolts (100) ≥ DN 8“ (090) Appply Loctite 222 or Weiconlock AN 302/22 to the threads			adjuster bolts (090) ≥ DN 8“ (080)		
	quantity	Nm	lbf · in	quantity	Nm	lbf · in
½“	4	25	221	2	4	35
¾“	4	25	221	2	4	35
1“	4	55	487	2	4	35
1½“	4	55	487	2	4	35
2“	4	80	708	2	4	35
3“	4	120	1062	2	6	53
4“	4	165	1460	2	8	71
6“	4	330	2921	2	17	150
8“	6	195	1726	2	20	177
10“	8	245	2168	4	30	266
12“	8	240	2124	4	30	266

** maximum values*

FLOWSERVE
Ahaus GmbH
von-Braun-Straße 19a
D-48683 Ahaus
Postfach 1162 D-48661 Ahaus
Telefon: +49(0) 2561-686-100
Fax: +49(0) 2561-686-200

Your distribution partner:
Blindeisenweg 31 • D-41468 Neuss • Tel.: +49 2131 / 15 39 28-0 • Fax: +49 2131 / 15 39 28-99 • info@fergo.eu • www.fergo.eu

T4E-1 & T4E-3 - Dimension sheet for actuator mounting DN½“ to DN6“

Top cap mounting acc. to DIN EN ISO 5211

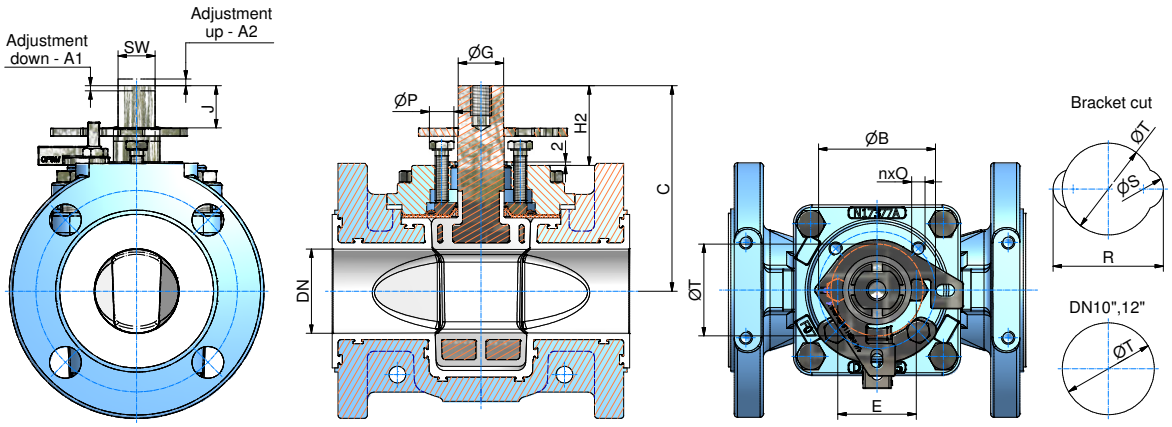

Flange top mounting

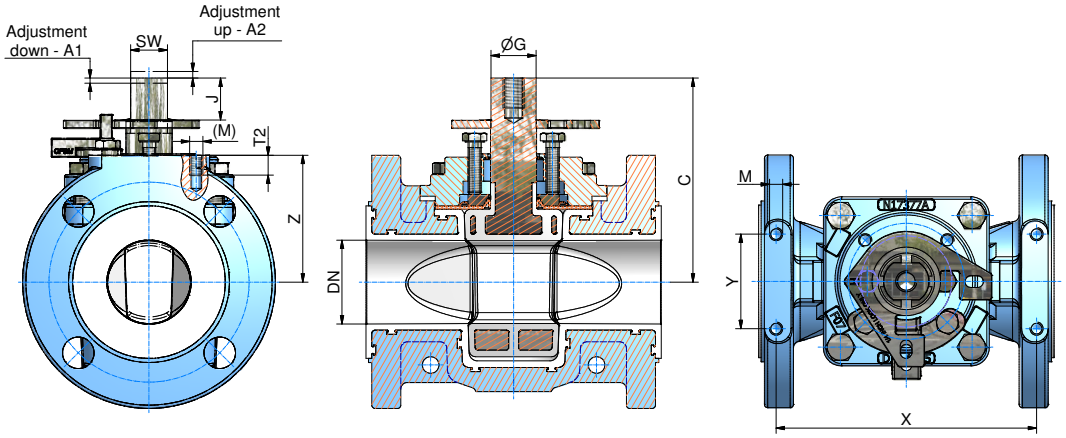

DN		SW	ØG	J	H2	C	Adjustment A1	Adjustment A2	F-Size DIN/ ISO 5211	ØB	nxO	E	ØP	R	ØS	ØT	M (M)	T2	X T4E1	X T4E3	Z T4E1	Z T4E3	Y T4E1	Y T4E3
½"	mm	16,6	20	15,5	38,5	92,5	2	2	F05	50	4xM6	38	13	54	16	35	UNC	9	90,5	118	46,5	50	50,8	50,8
	inch	0,65	0,79	0,61	1,52	3,64	0,08	0,08		1,97	- 8 deep	1,5	0,51	2,13	0,63	1,38	1/4-20	0,35	3,56	4,65	1,83	1,97	2	2
¾"	mm	16,6	20	15,5	38,5	92,5	2	2	F05	50	4xM6	38	13	54	16	35	UNC	9	99,6	127	51,5	61	50,8	50,8
	inch	0,65	0,79	0,61	1,52	3,64	0,08	0,08		1,97	- 8 deep	1,5	0,51	2,13	0,63	1,38	1/4-20	0,35	3,92	5	2,03	2,4	2	2
1"	mm	16,6	20	15,5	38,7	92,5	2	2	F05	50	4xM6	38	15	58	20	35	UNC	12	106,4	136	59,5	62	44,5	44,5
	inch	0,65	0,79	0,61	1,52	3,64	0,08	0,08		1,97	- 8 deep	1,5	0,59	2,28	0,79	1,38	5/16-18	0,47	4,19	5,35	2,34	2,44	1,75	1,75
1½"	mm	16,6	20	19	37,7	102	2	2	F05	50	4xM6	38	15	58	20	35	UNC	12	142,9	162	63,5	78	44,5	44,5
	inch	0,65	0,79	0,75	1,48	4,02	0,08	0,08		1,97	- 8 deep	1,5	0,59	2,28	0,79	1,38	5/16-18	0,47	5,63	6,38	2,500	3,07	1,75	1,75
2"	mm	22,2	27,2	25,2	49	123	2	2	F07	70	4xM8	47	15	67	20	55	UNC	12	157,2	187	76,5	82,5	57,2	57,2
	inch	0,87	1,07	0,99	1,93	4,84	0,08	0,08		2,76	- 12 deep	1,85	0,59	2,64	0,79	2,17	5/16-18	0,47	6,19	7,36	3,01	3,25	2,25	2,25
3"	mm	22,2	27,2	25,2	50,6	137	3	3	F07	70	4xM8	54	22	80	26	55	UNC	14	181	250,8	95,5	105	88,9	88,9
	inch	0,87	1,07	0,99	1,99	5,39	0,12	0,12		2,76	- 12 deep	2,13	0,87	3,15	1,02	2,17	3/8-16	0,55	7,13	9,87	3,76	4,13	3,5	3,5
4"	mm	36	42,8	40,4	70,2	177	3	3	F10	102	4xM10	73	22	99	26	70	UNC	16	203,2	269,9	114,5	127	101,6	101,6
	inch	1,42	1,69	1,59	2,76	6,97	0,12	0,12		4,02	- 16 deep	2,87	0,87	3,90	1,02	2,76	7/16-14	0,63	8	10,63	4,51	5,000	4	4
6"	mm	36	42,8	40,4	67,7	209	4	4	F12	125	4xM12	86	35	126	40	85	UNC	16	239,7	362	139	159	101,6	101,6
	inch	1,42	1,69	1,59	2,67	8,23	0,16	0,16		4,92	-21 deep	3,39	1,38	4,96	1,57	3,35	7/16-14	0,63	9,44	14,25	5,47	6,26	4	4

FLOWSERVE
Ahaus GmbH
von-Braun-Straße 19a
D-48683 Ahaus
Postfach 1162 D-48661 Ahaus
Telefon: +49(0) 2561-686-100
Fax: +49(0) 2561-686-200

Your distribution partner:
fergo
Bindeisenweg 31 • D-41468 Neuss • Tel.: +49 2131 / 15 39 28-0 • Fax: +49 2131 / 15 39 28-99 • info@fergo.eu • www.fergo.eu

T4E-1 & T4E-3 - Dimension sheet for actuator mounting DN8“ to DN12“

Top cap mounting acc. to DIN EN ISO 5211

Flange top mounting

DN		SW	ØG	J	H2	C	Adjustment A1	Adjustment A2	F-Size DIN/ ISO 5211	ØB	nxO	E	ØP	R	ØS	ØT	M (M)	T2	X T4E1	X T4E3	Z T4E1	Z T4E3	Y T4E1	Y T4E3
8"	mm	50	63,5	100	166,6	402	5	5	---	190,5	8xM16	133,4	53	190	56	130	M16	36	260,4	376,4	173,5	190,5	195,2	193,6
	inch	1,97	2,5	3,94	6,6	15,8	0,2	0,2		7,5	- 26deep	5,25	2,1	7,48	2,20	5,12		1,42	10,25	14,82	6,83	7,50	7,69	7,62
10"	mm	60	76,2	125	214,8	495	5	5	F25	254	8xM16	130,2	37	---	---	200	M20	39	294	*	214	*	200	*
	inch	2,36	3	4,92	8,46	19,49	0,2	0,2		10	- 26deep	5,13	1,46			7,87		1,54	11,57		8,43		7,87	
12"	mm	60	76,2	125	215,4	517	5	5	F25	254	8xM16	130,2	37	---	---	200	M20	40	312	449,3	233,5	268	200	152,4
	inch	2,36	3	4,92	8,48	20,35	0,2	0,2		10	-26 deep	5,13	1,46			7,87		1,57	12,28	17,69	9,19	10,55	7,87	6,00
14" °	mm	60	76,2	125	215	542	5	5	F25	200	8xM16	130	40	---	---	200	M20	40	342	---	270	---	178	---
	inch	2,36	3	4,92	8,46	21,34	0,2	0,2		8	- 26 deep	5,12	1,57			7,87		1,57	13,46		10,63		7	

* no actuator mounting on the flange
° DN14“ is only available in the T4E1 version

FLOWSERVE
Ahaus GmbH
von-Braun-Straße 19a
D-48683 Ahaus
Postfach 1162 D-48661 Ahaus
Telefon: +49(0) 2561-686-100
Fax: +49(0) 2561-686-200

Your distribution partner:
Blindeisenweg 31 • D-41468 Neuss • Tel.: +49 2131 / 15 39 28-0 • Fax: +49 2131 / 15 39 28-99 • info@fergo.eu • www.fergo.eu

T4E-2 - Dimension sheet for actuator mounting DN½“ to DN6“

Top cap mounting acc. to DIN EN ISO 5211

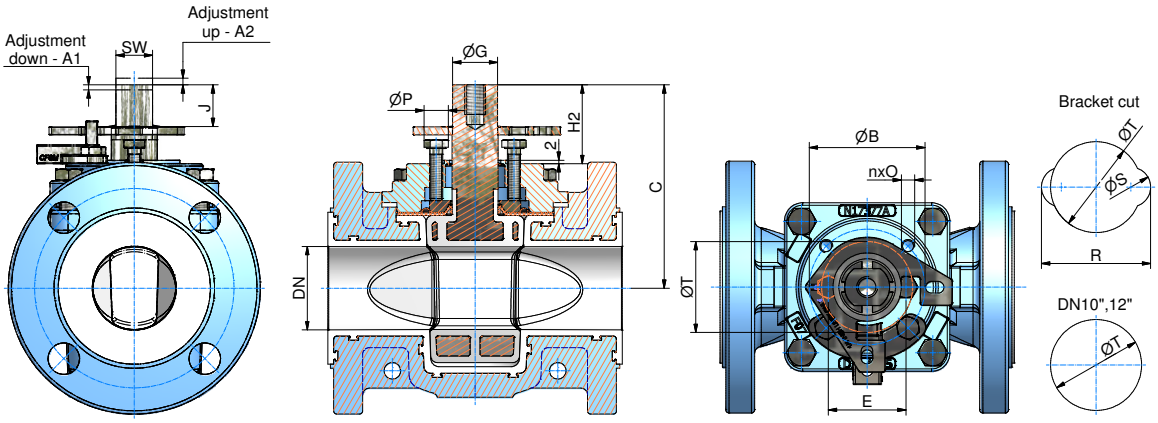

DN		SW	ØG	J	H2	C	Adjustment A1	Adjustment A2	F-Size DIN/ ISO 521	ØB	nxO	E	ØP	R	ØS	ØT
15	mm	16,6	20	15,5	38,5	92,5	2	2	F05	50	4xM6	38	13	54	16	35
	inch	0,65	0,79	0,61	1,52	3,64	0,08	0,08		1,97	- 8 deep	1,5	0,51	2,13	0,63	1,38
20	mm	16,6	20	15,5	38,5	92,5	2	2	F05	50	4xM6	38	13	54	16	35
	inch	0,65	0,79	0,61	1,52	3,64	0,08	0,08		1,97	- 8 deep	1,5	0,51	2,13	0,63	1,38
25	mm	16,6	20	15,5	38,7	92,5	2	2	F05	50	4xM6	38	15	58	20	35
	inch	0,65	0,79	0,61	1,52	3,64	0,08	0,08		1,97	- 8 deep	1,5	0,59	2,28	0,79	1,38
40	mm	16,6	20	19	37,7	102	2	2	F05	50	4xM6	38	15	58	20	35
	inch	0,65	0,79	0,75	1,48	4,02	0,08	0,08		1,97	- 8 deep	1,5	0,59	2,28	0,79	1,38
50	mm	22,2	27,2	25,2	49	103	2	2	F07	70	4xM8	47	15	67	20	55
	inch	0,87	1,07	0,99	1,93	4,06	0,08	0,08		2,76	- 12 deep	1,85	0,59	2,64	0,79	2,17
80	mm	22,1	27,2	25,2	50,6	137	3	3	F07	70	4xM8	54	22	80	26	55
	inch	0,87	1,07	0,99	1,99	5,39	0,12	0,12		2,76	- 12 deep	2,13	0,87	3,15	1,02	2,17
100	mm	36	42,8	40,4	70,2	177	3	3	F10	102	4xM10	73	22	99	26	70
	inch	1,42	1,69	1,59	2,76	6,97	0,12	0,12		4,02	- 16 deep	2,87	0,87	3,9	1,02	2,76
150	mm	36	42,8	40,4	67,7	209	4	4	F12	125	4xM12	86	35	126	40	85
	inch	1,42	1,69	1,59	2,67	8,23	0,16	0,16		4,92	- 21 deep	3,39	1,38	4,96	1,57	3,35

FLOWSERVE
Ahaus GmbH
von-Braun-Straße 19a
D-48683 Ahaus
Postfach 1162 D-48661 Ahaus
Telefon: +49(0) 2561-686-100
Fax: +49(0) 2561-686-200

Your distribution partner:
fergo
Blindeiserweg 31 • D-41468 Neuss • Tel.: +49 2131 / 15 39 28-0 • Fax: +49 2131 / 15 39 28-99 • info@fergo.eu • www.fergo.eu

T4E-2 - Dimension sheet for actuator mounting DN8“ to DN12“

Top cap mounting acc. to DIN EN ISO 5211

DN		SW	ØG	J	H2	C	Adjustment A1	Adjustment A2	F-Size DIN/ ISO 521	ØB	nxO	E	ØP	R	ØS	ØT
200	mm	50	63,5	100	166,6	402	5	5	-	190,5	8xM16	133,4	53	190	56	130
	inch	1,97	2,50	3,94	6,56	15,83	0,2	0,2		7,50	- 26 deep	5,25	2,09	7,48	2,2	5,12
250	mm	60	76,2	125	214,8	495	5	5	F25	254	8xM16	130,2	37	-	-	200
	inch	2,36	3,00	4,92	8,46	19,49	0,2	0,2		10	- 26 deep	5,13	1,46			7,87
300	mm	60	76,2	125	215,4	517	5	5	F25	254	8xM16	130,2	37	-	-	200
	inch	2,36	3,00	4,92	8,48	20,35	0,2	0,2		10	- 26 deep	5,13	1,46			7,87

Your distribution partner:
Blindeisenweg 31 • D-41468 Neuss • Tel.: +49 2131 / 15 39 28-0 • Fax: +49 2131 / 15 39 28-99 • info@fergo.eu • www.fergo.eu

T4E - Actuator Sizing Torques

- **for clean and clear application**

Size		Nm	lbf · in	MAST Nm	MAST lbf · in
015	**½"**	45	398	155	1372
020	**¾"**	45	398	155	1372
025	**1"**	45	398	155	1372
040	**1½"**	57	504	155	1372
050	**2"**	90	797	410	3629
080	**3"**	125	1106	410	3629
100	**4"**	237	2098	1655	14648
150	**6"**	645	5709	1655	14648
200	**8"**	1685	14914	3500	30978
250	**10"**	2640	23366	10750	95146
300	**12"**	3300	29207	10750	95146
-	**14" °**	3600	31863	10750	95146

° DN14" is only available in the T4E1 version

- **for dry and slurry application**

Size		Nm	lbf · in	MAST Nm	MAST lbf · in
015	**½"**	61	538	155	1372
020	**¾"**	61	538	155	1372
025	**1"**	61	538	155	1372
040	**1½"**	77	681	155	1372
050	**2"**	122	1075	410	3629
080	**3"**	169	1494	410	3629
100	**4"**	320	2832	1655	14648
150	**6"**	871	7707	1655	14648
200	**8"**	2205	19516	3500	30978
250	**10"**	3459	30615	10750	95146
300	**12"**	4315	38191	10750	95146
-	**14" °**	4860	43015	10750	95146

° DN14" is only available in the T4E1 version

- *Stated torques are sizing torques. No further safety factors are to be applied against these torques.*
- *The use of V-Plugs does not result in change in sizing torques.*
- *Stated sizing torques are „Break-Open" and „Re-Seating" torques. Running torques are typically 35% below sizing torques.*
- *The stated „MAST" value is the Maximum Allowable Stem Torque. Beyond this value permanent deformation / destruction of liner is to be expected.*
- *Please note the service conditions of the pressure- / vacuum-temperature-diagrams: register 1, page 13.*

Your distribution partner:
fergo
Blindeiserweg 31 • D-41468 Neuss • Tel.: +49 2131 / 15 39 28-0 • Fax: +49 2131 / 15 39 28-99 • info@fergo.eu • www.fergo.eu

T4E - K_v Data and C_v Data (DIN EN 60534-2-3)

DIN	ANSI	K_v m³/h	C_v gal/min
015	½“	12,6	14,6
020	¾“	15,3	17,8
025	1“	26,1	30,3
040	1 ½“	67,1	78,0
050	2“	156,0	181,3
080	3“	235,0	273,1
100	4“	404,0	469,6
150	6“	667,0	775,3
200	8“	1564,0	1817,8
250	10“	2120,0	2464,1
300	12“	-	-
-	14“ °	2670,0	3103,3

° DN14“ is only available in the T4E1 version

ET4E - K_v Data and C_v Data (DIN EN 60534-2-3)

V - Plug

DIN	ANSI	K_v m³/h	C_v gal/min
025	1“	7,2	8,4
025	1“	11,4	13,3
025	1“	21,4	24,9
040	1 ½“	25,5	29,6
050	2“	46,1	53,6
080	3“	76,3	88,7
100	4“	161,0	187,1

S - Plug

DIN	ANSI	K_v m³/h	C_v gal/min
025	1“	0,7	0,8
025	1“	2,6	3,0

Your distribution partner:
Blindeisenweg 31 • D-41468 Neuss • Tel.: +49 2131 / 15 39 28-0 • Fax: +49 2131 / 15 39 28-99 • info@fergo.eu • www.fergo.eu

Optional plug with side vent hole

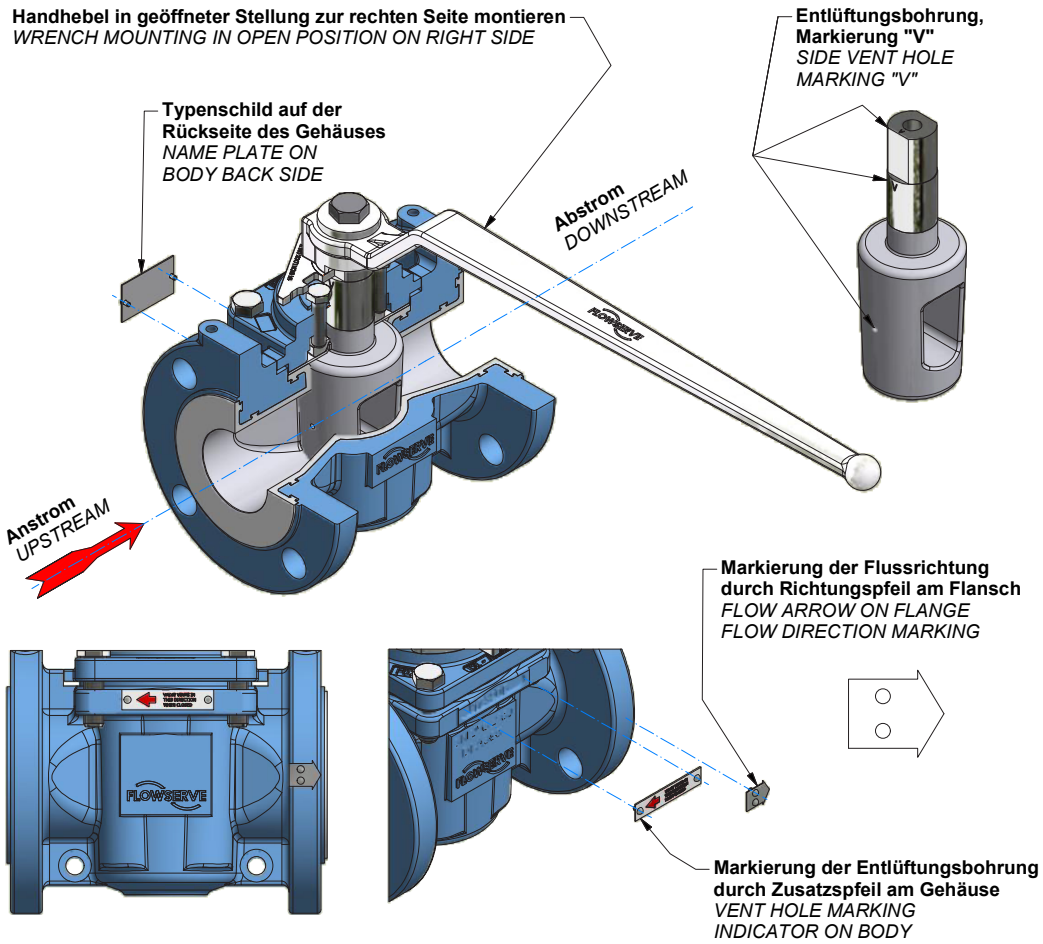

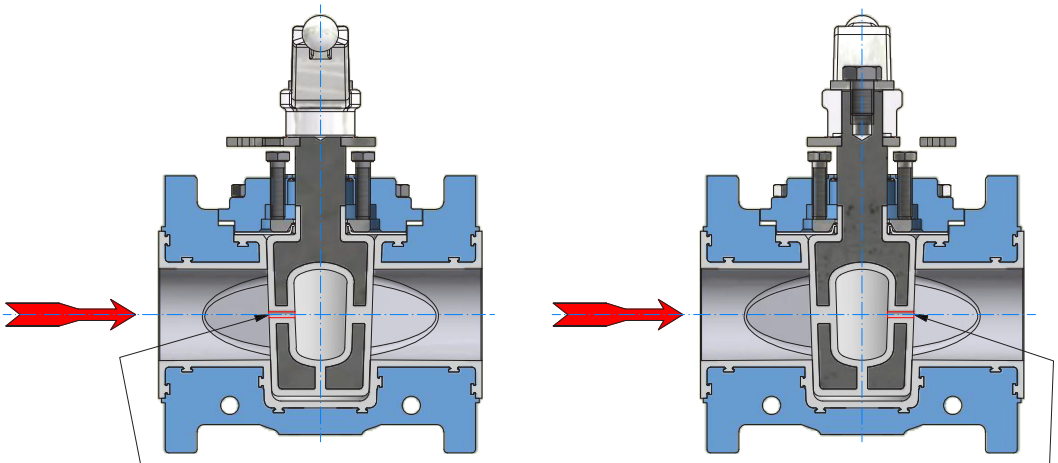

STANDARD
Seitliche Bohrung, Anstrom - Seite
SIDE VENT HOLE ON UPSTREAM SIDE

OPTIONAL
Seitliche Bohrung, Abstrom - Seite
SIDE VENT HOLE ON DOWNSTREAM SIDE

Your distribution partner:
fergo
Blindeiserweg 31 • D-41468 Neuss • Tel.: +49 2131 / 15 39 28-0 • Fax: +49 2131 / 15 39 28-99 • info@fergo.eu • www.fergo.eu
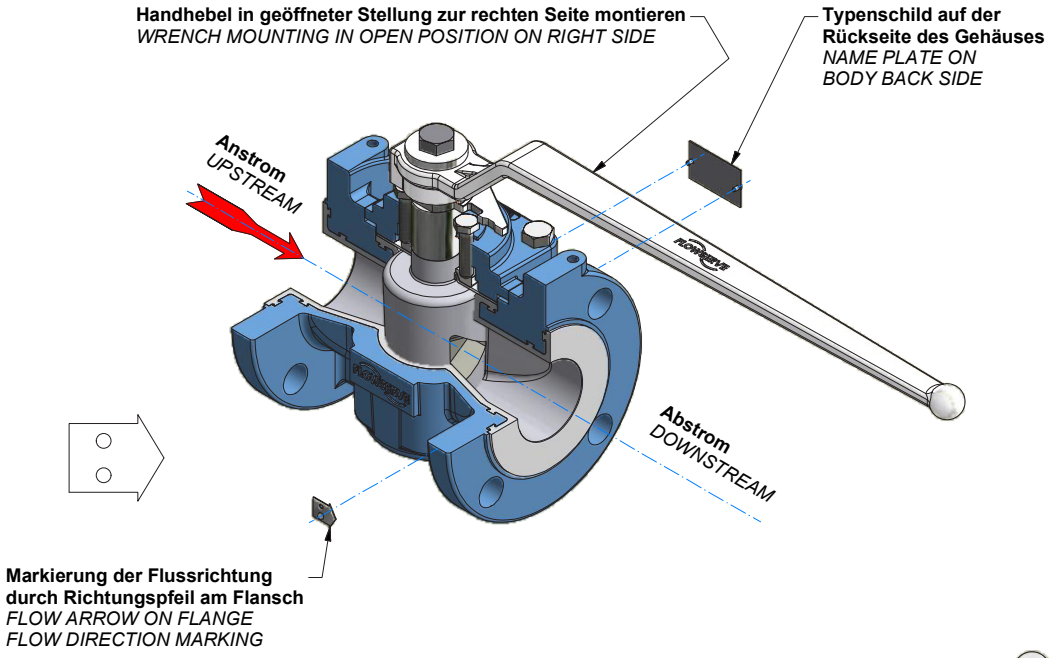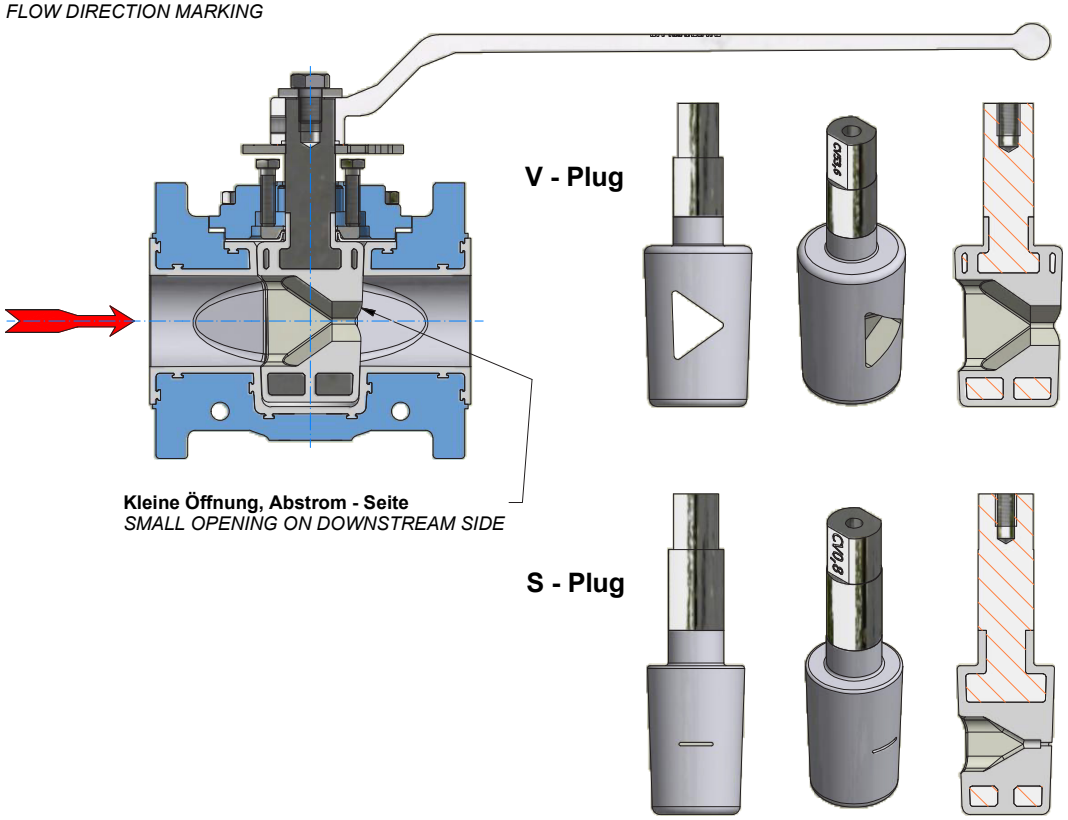
Optional with V-plug or S-plug